Mercedes-Benz
Trucks you can trust

ClassicSpace S-Cab

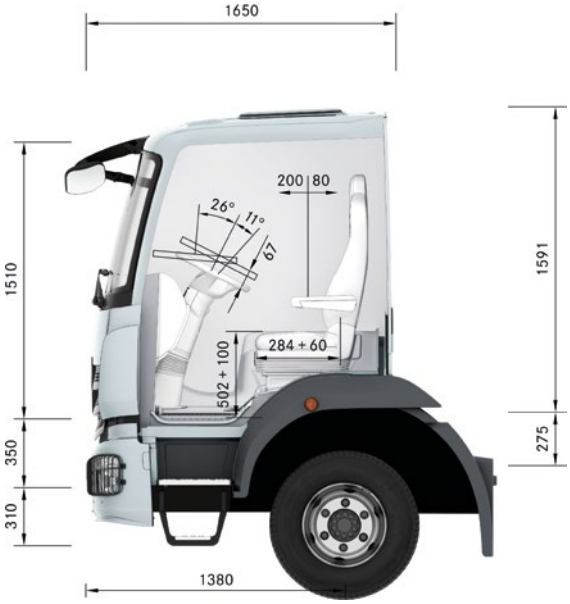

Exterior width [mm]	2295
Exterior length [mm]	1650
Interior width [mm]	2000
Interior height [mm]	1510

Measuring 2295 mm in width and 1650 mm in length, the ClassicSpace S-cab combines a comfortable workplace with a high level of visibility and full body length.

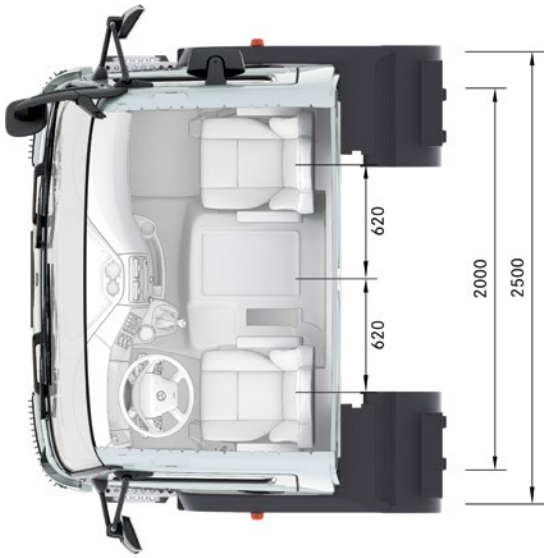

Date: January 2015