Mercedes-Benz
Trucks you can trust

ClassicSpace M-cab 2300 mm.

Exterior width [mm]	2300
Exterior length [mm]	2000
Headroom in front of the seats [mm]	1600
Headroom on 170 mm engine tunnel variant [mm]	1460
Headroom on 320 mm engine tunnel variant [mm]	1310

The ClassicSpace M-cab is longer than the ClassicSpace S-cab, which means that it offers more room and stowage space; and for even more comfort it can, for example, be fitted with a folding bunk.

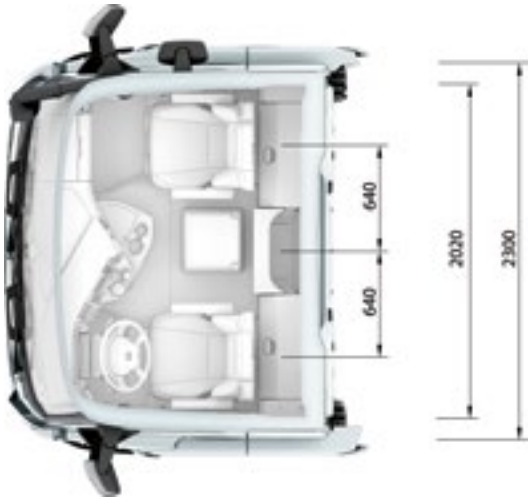

Date September 2016